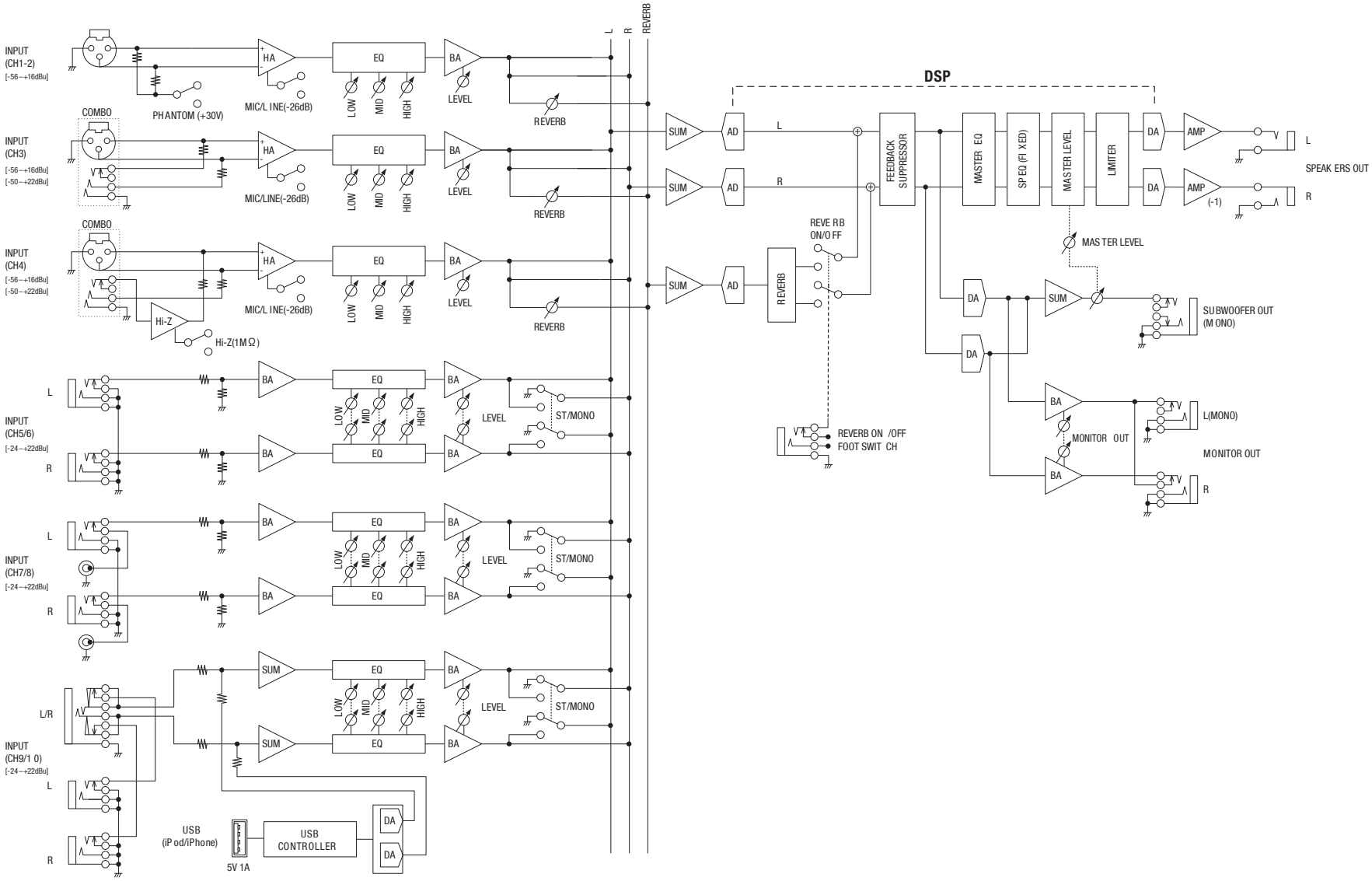STAGEPAS600i
Block Diagram